MR56 Datasheet

High Performance 802.11ax Wireless

The Cisco Meraki MR56 is a cloud-managed 8x8:8 802.11ax access point that raises the bar for wireless performance and efficiency. Designed for next-generation deployments in offices, schools, hospitals, shops, and hotels, the MR56 offers high throughput, enterprise-grade security, and simple management.

The MR56 provides a maximum of 5.9 Gbps* aggregate frame rate with concurrent 2.4 GHz and 5 GHz radios. A dedicated third radio provides real-time WIDS/WIPS with automated RF optimization, and a fourth integrated radio delivers Bluetooth scanning and beaconing.

With the combination of cloud management, high performance hardware, multiple radios, and advanced software features, the MR56 makes an outstanding platform for the most demanding of uses—including high-density deployments and bandwidth or performance-intensive applications like voice and high-definition video.

MR56 and Meraki Cloud Management

Management of the MR56 is performed through the Meraki cloud, with an intuitive browser-based interface that enables rapid deployment without time-

consuming training or costly certifications. Because the MR56 is self-configuring and managed over the web, it can be deployed at a remote location in a matter of minutes, even without on-site IT staff.

24x7 monitoring via the Meraki cloud delivers real-time alerts if a network encounters problems. Remote diagnostic tools enable immediate troubleshooting over the web so that distributed networks can be managed with a minimum of hassle.

The MR56's firmware is automatically kept up to date via the cloud. New features, bug fixes, and enhancements are delivered seamlessly over the web. This means no manual software updates to download or missing security patches to worry about.

Product Highlights

- 8x8:8 MU-MIMO 802.11ax
- 5.9* Gbps dual-radio aggregate frame rate
- 24x7 real-time WIDS/WIPS and spectrum analytics via dedicated third radio
- Integrated Bluetooth Low Energy Beacon
- Integrated scanning radio
- Enhanced transmit power and receive sensitivity
- Integrated enterprise security and guest access
- Application-aware traffic shaping
- Optimized for voice and video
- Self-configuring, plug-and-play deployment
- Sleek design blends into office environments
- Full-time Wi-Fi location tracking via dedicated 3rd radio

Features

Dual–radio aggregate frame rate of up to 5.9 Gbps*
5 GHz 8x8:8 radio and 2.4 GHz 4x4:4 radio offer a combined dual–radio aggregate frame rate of 5.9 Gbps*, with up to 4,804 Mbps in the 5 GHz band and 1,147 Mbps in the 2.4 GHz band. Technologies like transmit beamforming and enhanced receive sensitivity allow the MR56 to support a higher client density than typical enterprise-class access points, resulting in better performance for more clients, from each AP.

* Refers to maximum over-the-air data frame rate capability of the radio chipset, and may exceed data rates allowed by IEEE 802.11ax operation.

Multi User Multiple Input Multiple Output (MU-MIMO)
With support for features of 802.11ax, the MR56 offers MU-MIMO and OFDMA for more efficient transmission to multiple clients. Especially suited to environments with numerous mobile devices, MU-MIMO enables multiple clients to receive data simultaneously. This increases the total network performance and improves the end user experience.

Dedicated third radio delivers 24x7 wireless security and RF analytics
The MR56's dedicated dual-band scanning and security radio continually assesses the environment, characterizing RF interference and containing wireless threats like rogue access points. There's no need to choose between wireless security, advanced RF analysis, and serving client data - a dedicated third radio means that all functions occur in real-time, without any impact to client traffic or AP throughput.

Bluetooth Low Energy Beacon and scanning radio
An integrated fourth Bluetooth radio provides seamless deployment of BLE Beacon functionality and effortless visibility of Bluetooth devices. The MR56 enables the next generation of location-aware applications while future proofing deployments, ensuring it's ready for any new customer engagement strategies.

Automatic cloud-based RF optimization

The MR56's sophisticated and automated RF optimization means that there is no need for the dedicated hardware and RF expertise typically required to tune a wireless network. The RF data collected by the dedicated third radio is continuously fed back to the Meraki cloud. This data is then used to automatically tune the channel selection, transmit power, and client connection settings for optimal performance under even the most challenging RF conditions.

Integrated enterprise security and guest access
The MR56 features integrated, easy-to-use security technologies to provide secure connectivity for employees and guests alike. Advanced security features such as AES hardware-based encryption and Enterprise authentication with 802.1X and Active Directory integration provide wired-like security while still being easy to configure. One-click guest isolation provides secure, Internet-only access for visitors. PCI compliance reports check network settings against PCI requirements to simplify secure retail deployments.

Enterprise Mobility Management (EMM) & Mobile Device Management (MDM) integration
Meraki Systems Manager natively integrates with the MR56 to offer automatic, context-aware security. Systems Manager's self-service enrollment helps to rapidly deploy MDM without installing additional equipment, and then dynamically tie firewall and traffic shaping policies to client posture.

Application-aware traffic shaping
The MR56 includes an integrated layer 7 packet inspection, classification, and control engine, enabling the configuration of QoS policies based on traffic type, helping to prioritize mission-critical applications while setting limits on recreational traffic like peer-to-peer and video streaming. Policies can be implemented per network, per SSID, per user group, or per individual user for maximum flexibility and control.

Voice and video optimizations
Industry standard QoS features are built-in and easy to configure. Wireless MultiMedia (WMM) access categories, 802.1p, and DSCP standards support all ensure important applications get prioritized correctly, not only on the MR56, but on other devices in the network. Unscheduled Automatic Power Save Delivery (U-APSD) and new Target Wait Time features in 802.11ax clients ensure minimal battery drain on wireless VoIP phones.

Self-configuring, self-maintaining, always up-to-date
When plugged in, the MR56 automatically connects to the Meraki cloud, downloads its configuration, and joins the appropriate network. If new firmware is required, this is retrieved by the AP and updated automatically. This ensures the network is kept up-to-date with bug fixes, security updates, and new features.

Advanced analytics
Drilling down into the details of network usage provides highly granular traffic analytics. Visibility into the physical world can be enhanced with journey tracking through location analytics. Visitor numbers, dwell time, repeat visit rates, and track trends can all be easily monitored in the dashboard and deeper analysis is enabled with raw data available via simple APIs.

Specifications

Category	Specifications
Radios	• 2.4 GHz 802.11b/g/n/ax client access radio • 5 GHz 802.11a/n/ac/ax client access radio • 2.4 GHz & 5 GHz dual-band WIDS/WIPS, spectrum analysis, & location analytics radio • 2.4 GHz Bluetooth Low Energy (BLE) radio with Beacon and BLE scanning support • Concurrent operation of all four radios • Supported frequency bands (country-specific restrictions apply) • Supported frequency bands (country-specific restrictions apply): ◦ 2.412-2.484 GHz ◦ 5.150-5.250 GHz (UNII-1) ◦ 5.250-5.350 GHZ (UNII-2) ◦ 5.470-5.600, 5.660-5.725 GHz (UNII-2e) ◦ 5.725 -5.825 GHz (UNII-3)

Antenna	• Internal Antenna (5.4 dBi gain at 2.4 GHz, 6 dBi gain at 5 GHz)
802.11ax, 802.11ac Wave 2 and 802.11n Capabilities	• DL-OFDMA**, UL-OFDMA**, TWT support**, BSS Coloring** • 8 x 8 multiple input, multiple output (MIMO) with eight spatial streams on 5GHz • 4 x 4 multiple input, multiple output (MIMO) with four spatial streams on 2.4GHz • SU-MIMO, UL MU-MIMO** and DL MU-MIMO support • Maximal ratio combining (MRC) & beamforming • 20 and 40 MHz channels (802.11n); 20, 40, and 80 MHz channels (802.11ac Wave 2); 20, 40 and 80 MHz channels (802.11ax) • Up to 1024-QAM on both 2.4 GHz & 5 GHz bands • Packet aggregation
Power	• Power over Ethernet: 42.5 - 57 V (802.at compliant) • Alternative: 12 V DC input • Power consumption: 22W max (802.3at) • Power over Ethernet injector and DC adapter sold separately
Interfaces	• 1x 1000/2.5G/5G BASE-T Ethernet (RJ45) • 1x DC power connector (5.5 mm x 2.5 mm, center positive)
Mounting	• All standard mounting hardware included • Desktop, ceiling, and wall mount capable • Ceiling tile rail (9/16, 15/16 or 1 1⁄2” flush or recessed rails), assorted cable junction boxes • Bubble level on mounting cradle for accurate horizontal wall mounting
Physical Security	• Two security screw options (included) (3.5 mm long and 2.5 mm diameter and 5 mm head) • Kensington lock hard point • Concealed mount plate with anti-tamper cable bay
Environment	• Operating temperature: 32 °F to 104 °F (0 °C to 40 °C) • Humidity: 5 to 95% non-condensing
Physical Dimensions	• 12.83” x 5.54” x 1.76” (32.6 cm x 14.079 cm x 4.47 cm), not including deskmount feet or mount plate • Weight: 1 kg
Security	• Integrated Layer 7 firewall with mobile device policy management • Real-time WIDS/WIPS with alerting and automatic rogue AP containment with Air Marshal • Flexible guest access with device isolation • VLAN tagging (802.1q) and tunneling with IPsec VPN • PCI compliance reporting

	• WEP***, WPA, WPA2-PSK, WPA2-Enterprise with 802.1X, WPA3 - Personal**, WPA3 - Enterprise**, WPA3 - Enhanced Open (OWE)** • EAP-TLS, EAP-TTLS, EAP-MSCHAPv2, EAP-SIM • TKIP and AES encryption • Enterprise Mobility Management (EMM) & Mobile Device Management (MDM) integration • Cisco ISE integration for Guest access and BYOD Posturing
Quality of Service	• Advanced Power Save (U-APSD) • WMM Access Categories with DSCP and 802.1p support • Layer 7 application traffic identification and shaping
Mobility	• PMK, OKC, & 802.11r for fast Layer 2 roaming • Distributed or centralized layer 3 roaming
Analytics	• Embedded location analytics reporting and device tracking • Global L7 traffic analytics reporting per network, per device, & per application
LED Indicators	• 1 power/booting/firmware upgrade status
Regulatory	• RoHS • For additional country-specific regulatory information, please contact Meraki sales
Warranty	• Lifetime hardware warranty with advanced replacement included
Ordering Information	• MR56-HW: Meraki MR56 Cloud Managed 802.11ax AP • MA-PWR-30W-XX: Meraki AC Adapter for MR Series (XX = US/EU/UK/AU) • MA-INJ-4-XX: Meraki Gigabit 802.3at Power over Ethernet Injector (XX = US/EU/UK/AU) • MA-INJ-5-XX: Meraki Multigigabit 802.3at Power over Ethernet Injector (XX = US/EU/UK/AU) • Note: Meraki access point license required.

** software features can be enabled via firmware updates

Compliance and Standards

Category	Standards
IEEE Standards	• 802.11a, 802.11ac, 802.11ax, 802.11b, 802.11e, 802.11g, 802.11h, 802.11i, 802.11k, 802.11n, 802.11r, and 802.11u***

Safety Approvals	• CSA and CB 60950 & 62368 • Conforms to UL 2043 (Plenum Rating)
Radio Approvals	• Canada: FCC Part 15C, 15E, RSS-247 • Europe: EN 300 328, EN 301 893 • Australia/NZ: AS/NZS 4268 • Mexico: IFT, NOM-208 • Taiwan: NCC LP0002 • For additional country-specific regulatory information, please contact Meraki Sales
EMI Approvals (Class B)	• Canada: FCC Part 15B, ICES-003 • Europe: EN 301 489-1-17, EN 55032, EN 55024 • Australia/NZ: CISPR 22 • Japan: VCCI
Exposure Approvals	• Canada: FCC Part 2, RSS-102 • Europe: EN 50385, EN 62311, EN 62479 • Australia/NZ: AS/NZS 2772

*** feature can be enabled for required networks

Context and Comparisons

802.11ax, 802.11ac Wave 2 and 802.11n Capabilities

MR36	MR46	MR56
DL-OFDMA**, UL-OFDMA**, TWT support**, BSS coloring**	DL-OFDMA**, UL-OFDMA**, TWT support**, BSS coloring**	DL-OFDMA**, UL-OFDMA**, TWT support**, BSS coloring**
2 x 2 multiple input, multiple output (MIMO) with two spatial streams	4 x 4 multiple input, multiple output (MIMO) with four spatial streams	8 x 8 multiple input, multiple output (MIMO) with eight spatial streams on 5 GHz 4 x 4 multiple input, multiple output (MIMO) with eight spatial streams on 2.4 GHz
Maximal ratio combining (MRC) & beamforming	Maximal ratio combining (MRC) & beamforming	Maximal ratio combining (MRC) & beamforming
SU-MIMO, UL MU-MIMO** and DL MU-MIMO support	SU-MIMO, UL MU-MIMO** and DL MU-MIMO support	SU-MIMO, UL MU-MIMO** and DL MU-MIMO support

20 and 40 MHz channels (802.11n); 20, 40, and 80 MHz channels (802.11ac Wave 2); 20, 40 and 80 MHz channels (802.11ax)	20 and 40 MHz channels (802.11n); 20, 40, and 80 MHz channels (802.11ac Wave 2); 20, 40 and 80 MHz channels (802.11ax)	20 and 40 MHz channels (802.11n); 20, 40, and 80 MHz channels (802.11ac Wave 2); 20, 40 and 80MHz channels (802.11ax)
Up to 1024-QAM on both 2.4 GHz & 5 GHz bands	Up to 1024-QAM on both 2.4 GHz & 5 GHz bands	Up to 1024-QAM on both 2.4 GHz & 5 GHz bands
Packet aggregation	Packet aggregation	Packet aggregation

Power

MR36	MR46	MR56
Power over Ethernet: 37 - 57 V (802.af compliant)	Power over Ethernet: 42.5 - 57 V (802.3at compliant)	Power over Ethernet: 42.5 - 57 V (802.3at compliant)
Alternative: 12 V DC input	Alternative: 12 V DC input	Alternative: 12 V DC input
Power consumption: 15W max (802.3af)	Power consumption: 18W max	Power consumption: 18W max
Power over Ethernet injector and DC adapter sold separately	Power over Ethernet injector and DC adapter sold separately	Power over Ethernet injector and DC adapter sold separately

Interfaces

MR36	MR46	MR56
1x 10/100/1000 BASE-T Ethernet (RJ45)	1x 1000/2.5G BASE-T Ethernet (RJ45)	1x 1000/2.5G/5G BASE-T Ethernet (RJ45)
1x DC power connector (5.5 mm x 2.5 mm, center positive)	1x DC power connector (5.5 mm x 2.5 mm, center positive)	1x DC power connector (5.5 mm x 2.5 mm, center positive)

Physical Dimensions

MR36	MR46	MR56
9.84” x 4.72” x 1.42” (25 cm x 12 cm x 3.6 cm), not including desk mount feet or mount plate	12.05” x 5.06” x 1.74” (30.6 cm x 12.84 cm x 4.426 cm), not including desk mount feet or mount plate	12.83” x 5.54” x 1.76” (32.6 cm x 14.079 cm x 4.47 cm), not including deskmount feet or mount plate
Weight: 492 g	Weight: 800 g	Weight: 1 kg

RF Performance Table

2.4 GHz

Operating Band	Operating Mode	Data Rate	TX Power (conducted)
2.4 GHz	802.11b	1 Mb/s	26
		2 Mb/s	26
		5.5 Mb/s	26
		11 Mb/s	26
2.4 GHz	802.11g	6 Mb/s	26
		9 Mb/s	26
		12 Mb/s	26
		18 Mb/s	26
		24 Mb/s	24
		36 Mb/s	24
		48 Mb/s	24
		54 Mb/s	24
2.4 GHz	802.11n (HT20)	MCS0	26
		MCS1	26
		MCS2	26
		MCS3	26
		MCS4	26

		MCS5	24
		MCS6	24
		MCS7	23.5
2.4 GHz	802.11ax (HE20)	MCS0	26
		MCS1	26
		MCS2	26
		MCS3	26
		MCS4	26
		MCS5	25
		MCS6	25
		MCS7	23.5
		MCS8	22.5
		MCS9	22.5
		MCS10	20.5
		MCS11	20.5

5 GHz

Operating Band	Operating Mode	Data Rate	TX Power
5 GHz	802.11a	6 Mb/s	26

		9 Mb/s	26
		12 Mb/s	26
		18 Mb/s	26
		24 Mb/s	26
		36 Mb/s	26
		48 Mb/s	25
		54 Mb/s	24.5
5 GHz	802.11n (HT20)	MCS0	26
		MCS1	26
		MCS2	26
		MCS3	26
		MCS4	26
		MCS5	25
		MCS6	25
		MCS7	24.5
5 GHz	802.11n (HT40)	MCS0	26
		MCS1	26
		MCS2	26
		MCS3	26

		MCS4	26
		MCS5	25
		MCS6	24.5
		MCS7	24
5 GHz	802.11ac (VHT20)	MCS0	26
		MCS1	26
		MCS2	26
		MCS3	26
		MCS4	26
		MCS5	25
		MCS6	25
		MCS7	24.5
		MCS8	23.5
5 GHz	802.11ac (VHT40)	MCS0	26
		MCS1	26
		MCS2	26
		MCS3	26
		MCS4	26
		MCS5	25

		MCS6	24.5
		MCS7	24
		MCS8	23
		MCS9	22.5
5 GHz	802.11ac (VHT80)	MCS0	26
		MCS1	26
		MCS2	26
		MCS3	26
		MCS4	26
		MCS5	24
		MCS6	24
		MCS7	23
		MCS8	22
		MCS9	22
5 GHz	802.11ax (HE20)	MCS0	26
		MCS1	26
		MCS2	26
		MCS3	26
		MCS4	26

		MCS5	25
		MCS6	25
		MCS7	24.5
		MCS8	23.5
		MCS9	23
		MCS10	21.5
		MCS11	21.5
5 GHz	802.11ax (HE40)	MCS0	25
		MCS1	26
		MCS2	26
		MCS3	26
		MCS4	26
		MCS5	25
		MCS6	24.5
		MCS7	24
		MCS8	23
		MCS9	22.5
		MCS10	21
		MCS11	21

5 GHz	802.11ax (HE80)	MCS0	26
		MCS1	26
		MCS2	26
		MCS3	26
		MCS4	26
		MCS5	24
		MCS6	24
		MCS7	23
		MCS8	22
		MCS9	22
		MCS10	20
		MCS11	20

Signal Coverage Patterns

5 GHz - Wireless

X-Y plane

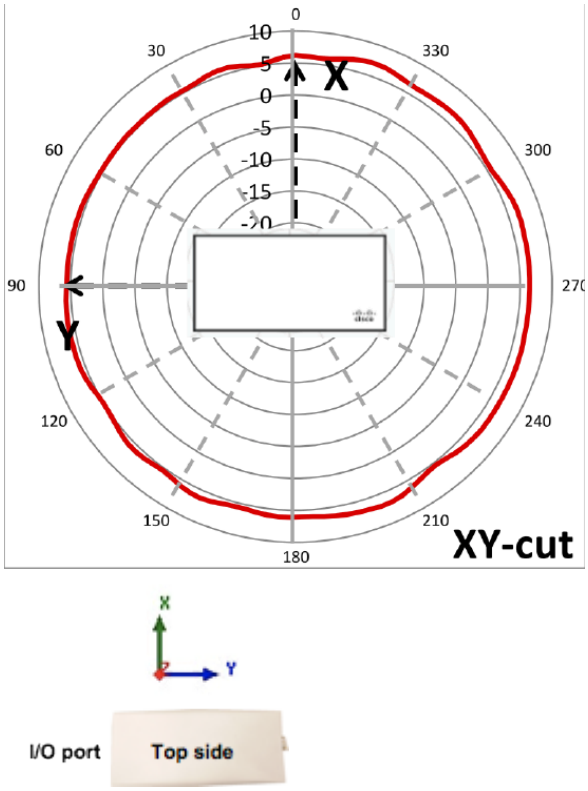
0
30
330
60
300
90
270
120
240
150
210
180
10
5
0
-5
-10
-15
-20
X
Y
XY-cut
X
Y
I/O port
Top side

X-Z plane

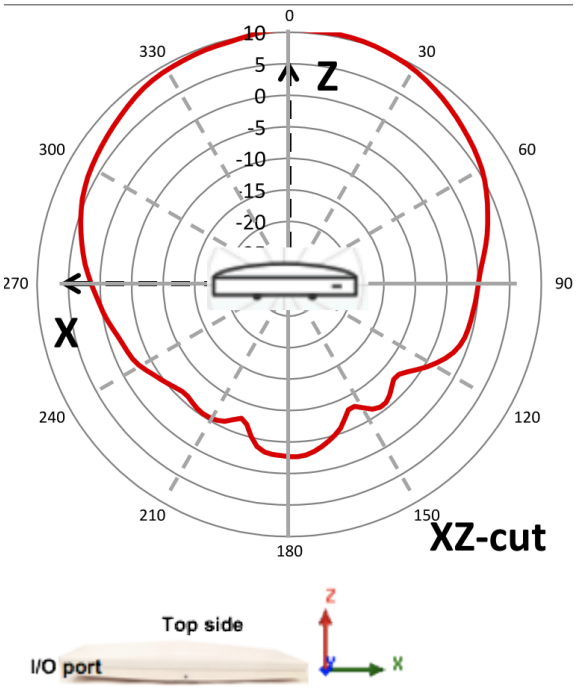
0
330
30
300
60
270
90
240
120
210
150
180
10
5
0
-5
-10
-15
-20
Z
X
XZ-cut
Top side
I/O port
Z
X

Y-Z plane

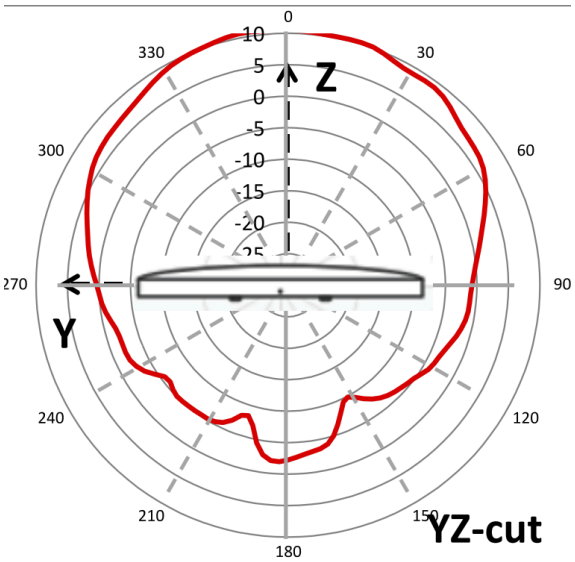

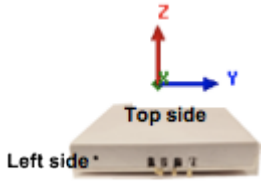

2.4 GHz - Wireless

X-Y plane

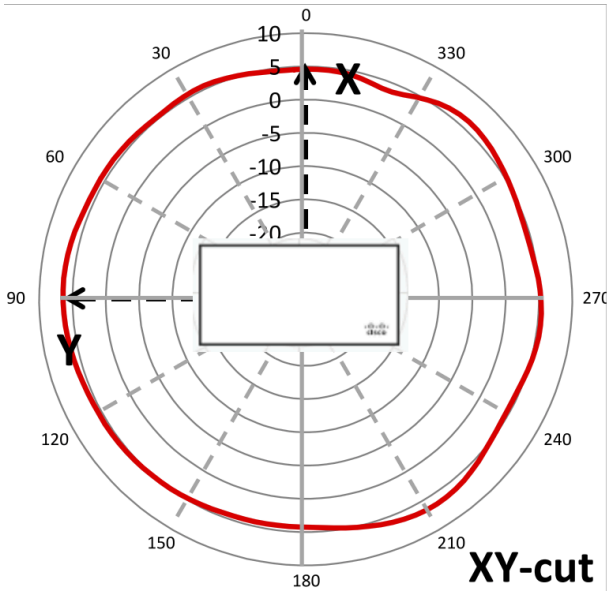

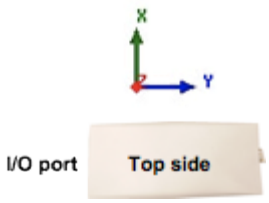

X-Z plane

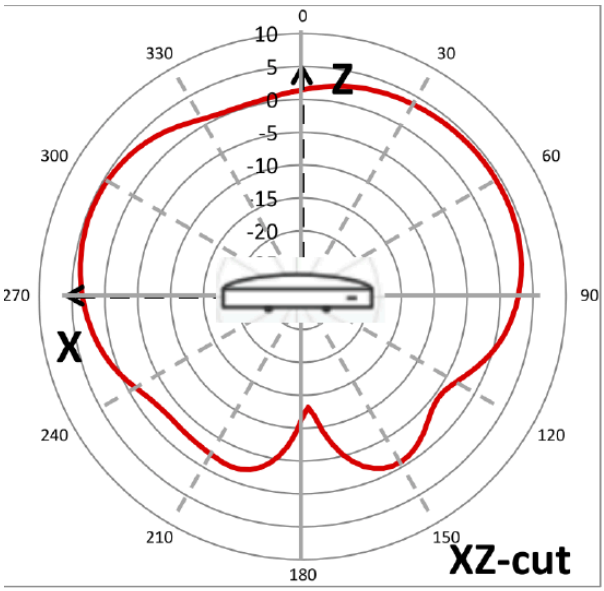

Y-Z plane

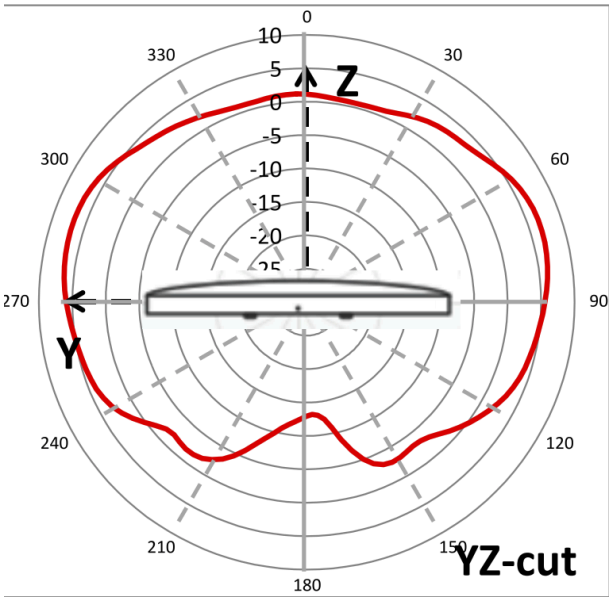

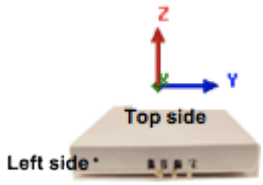

2.4GHz - Bluetooth

X-Y plane

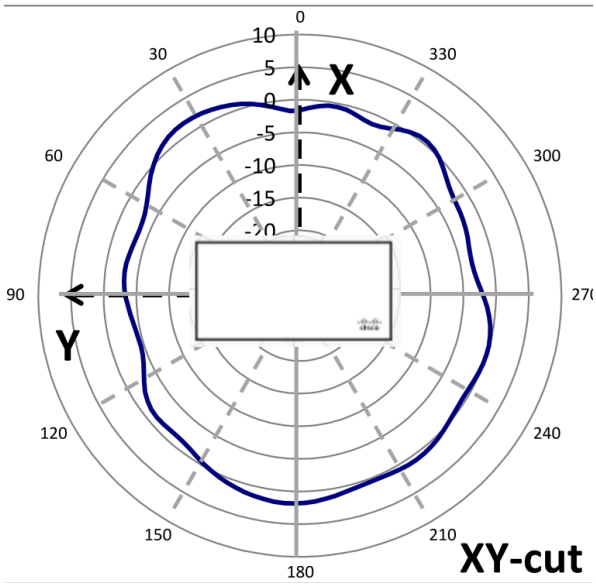

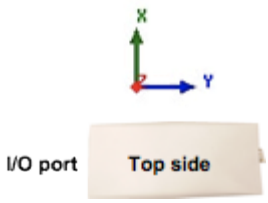

X-Z plane

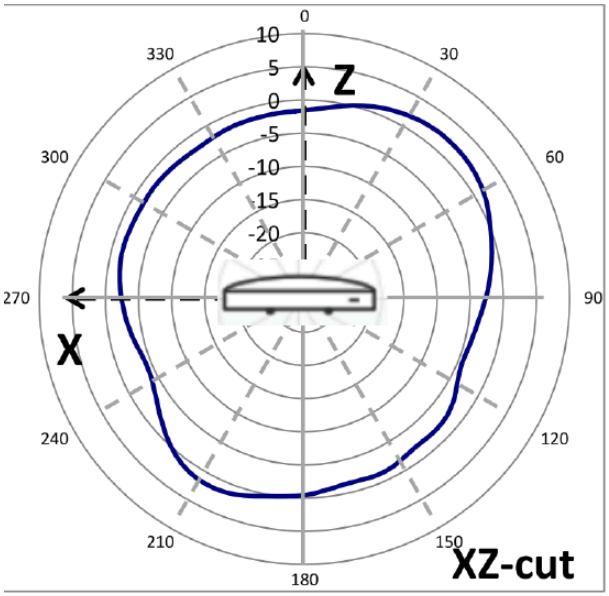

Y-Z plane

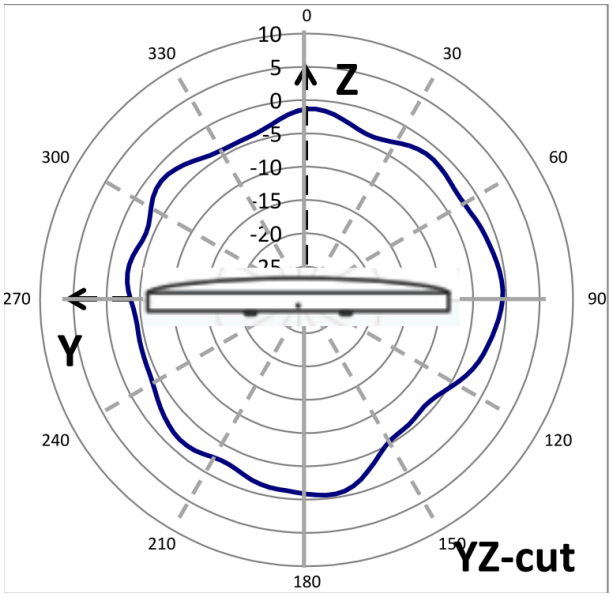

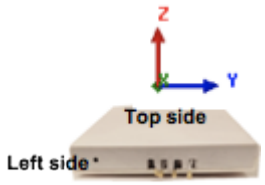

2.4 GHz - Scanning

X-Y plane

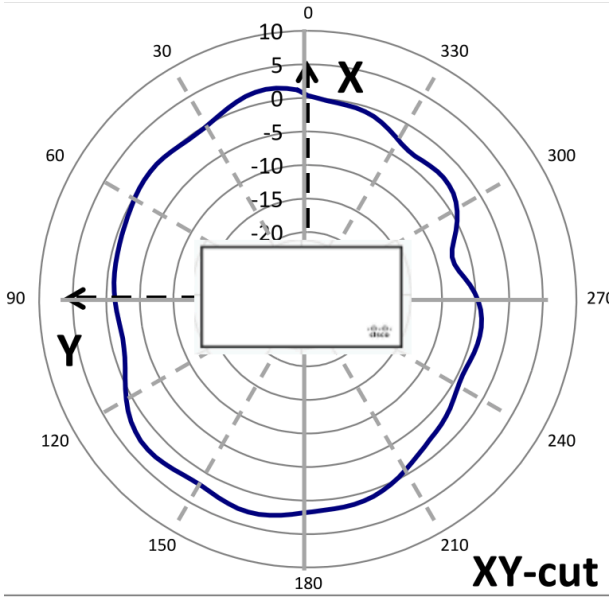

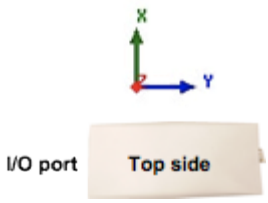

X-Z plane

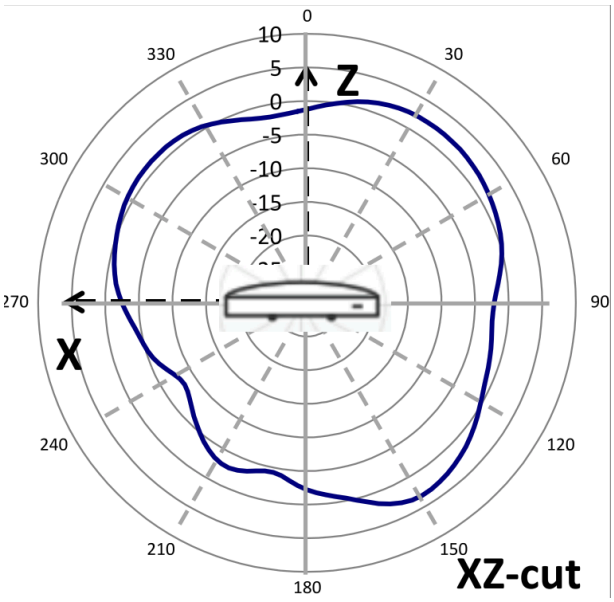

Y-Z plane

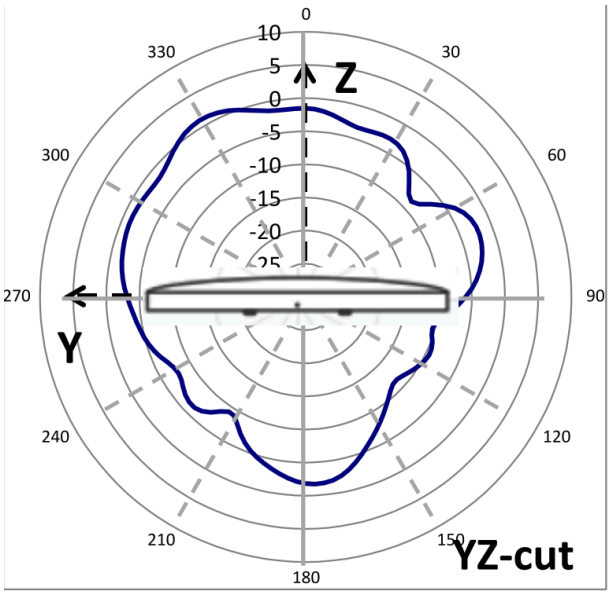

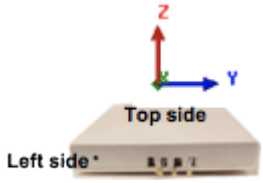

5 GHz - Scanning

X-Y plane

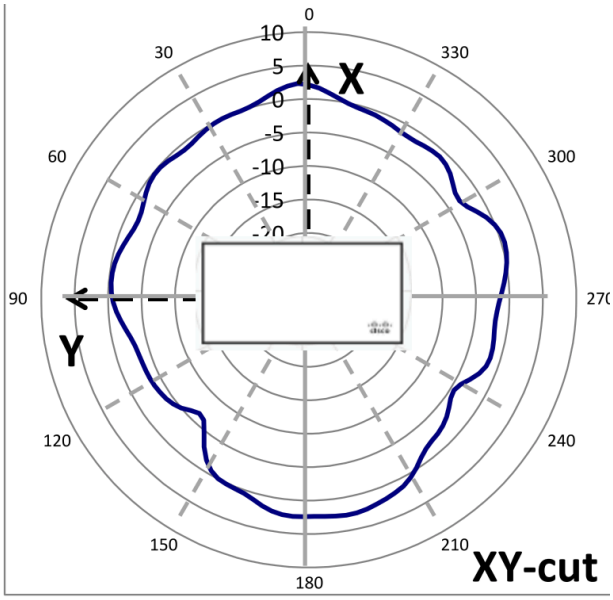

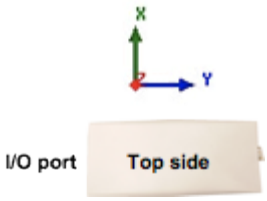

X-Z plane

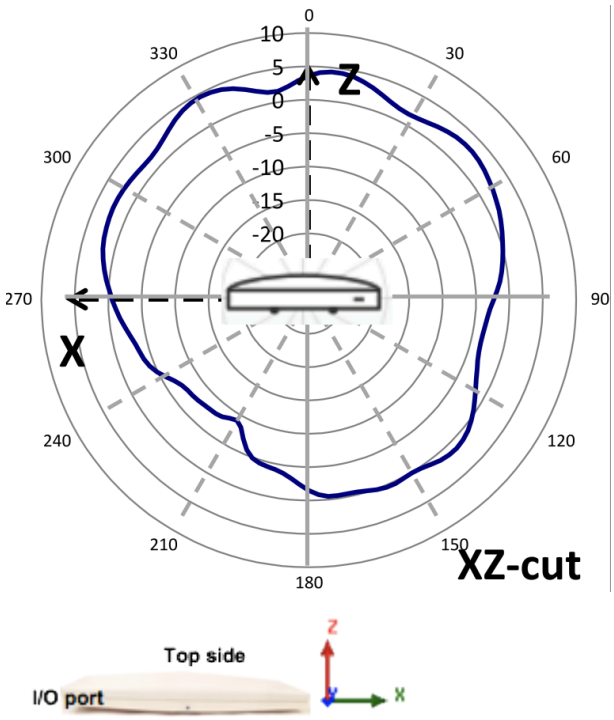

Y-Z plane

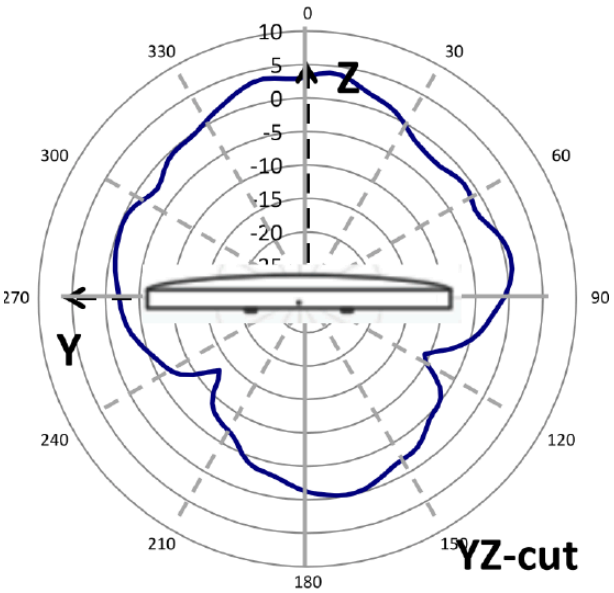

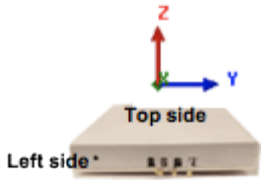

Installation Guide

For instructions on how to install and configure MR56 access points please refer the MR56 Installation Guide